QFM-180 Miniature Series
Quartz Flexure Accelerometer

Making Sense out of Motion…

The Jewell Instruments QFM-180 Series Miniature Accelerometers are state of the art quartz flexure technology that provides high accuracy, repeatability and stability even in the harshest of environments.

Features & Benefits

- High Temperature Range
- Excellent Repeatability
- High Accuracy
- Environmentally Rugged
- High Stability
- Square Mounting Flanges
- Miniature Design
- Industrial Grade Applications

Applications

- Well borehole logging (Wireline)
- Measure While Drilling (MWD)
- Oil Drilling
- Orientation Systems for Drilling Applications
- Borehole Mapping

Outline Drawing

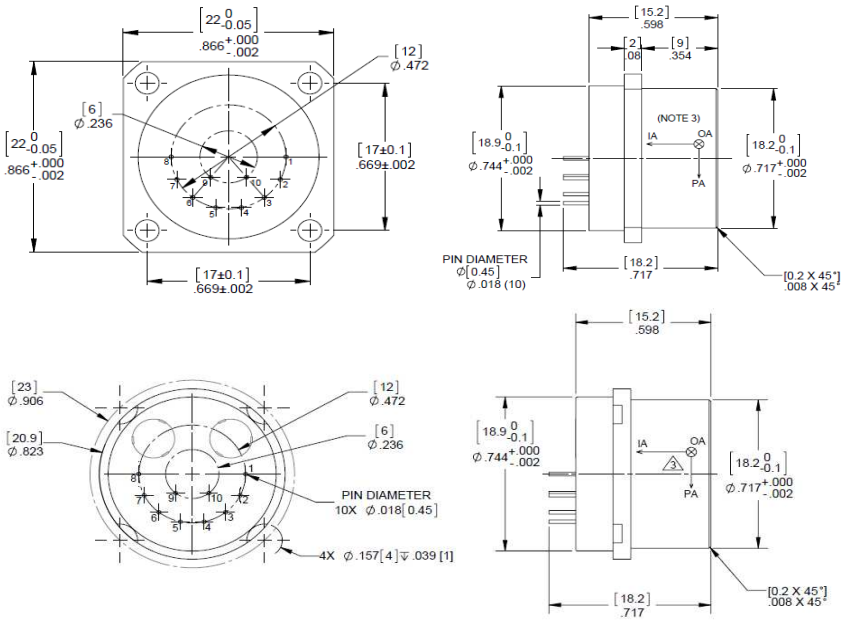

Note 3: IA = Input Axis (sense), OA = Output Axis (hinge), PA = Pendulum Axis

Pin Connections

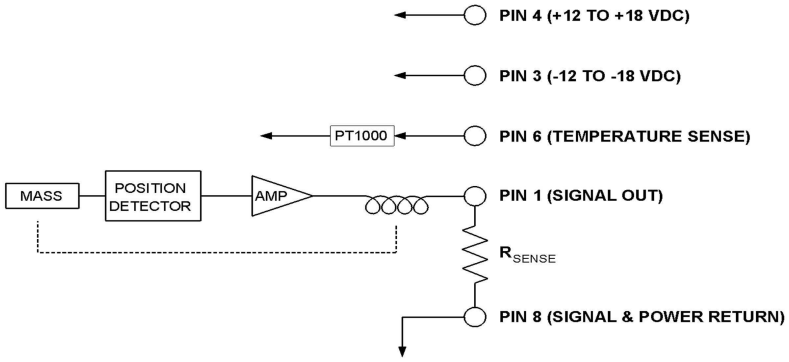

Jewell Instruments LLC, 850 Perimeter Road, Manchester, NH 03103

sales@jewellinstruments.com • www.jewellinstruments.com • Tel (800) 227-5955

QFM-180 Miniature Series
Quartz Flexure Accelerometer

Making Sense out of Motion…

Performance Specifications

Performance

Acceleration Range, g Max. (Note 1, 2)	±20
Scale Factor, mA/g (Note 2)	1.8 to 2.8
Bias, milli-g, Max. (@ 25° C)	20
Axis Alignment, mRad, Max. (@ 25° C)	4
Threshold and Resolution, µg, Max.	10
Bandwidth, Hz, Min.	300
Scale Factor Temp. Sens, PPM/°C, Max.:	±200
Bias Temp. Sens, µg/°C, Max.	±150
Scale Factor Stability (1 month composite)	less than 220 ppm
Bias Stability (1 month composite)	less than 220 ug
Noise, mgrms, Max. (0Hz to 10kHz) (Max.)	4
Weight (grams)	25

Electrical

Input Voltage, Vdc	±12 to ±15
Input Current (quiescent), mA (Max.)	20
Output Impedance, ohms	External Load Resistor Dependent

Environmental

Operational Temp Range, °C	-40°C to +180°C
Vibration, (Sine), Max.	25 Hz to 500 Hz, 30g
Vibration, (Random) Rectification, ug/g²rms, Max.	50 Hz to 500 Hz, 100 ug/g²rms
Shock, g (0.5 msec, 1/2 sine)	1000

Note 1: Specifications apply and are characterized up to ±1g range. The accelerometer is capable of supplying acceleration information up to ±20g but at reduced accuracy.

Note 2: Voltage output via customer supplied load resistor.

Custom Capabilities

Scale factor shown in mA/g as a standard. If you require scale factor in volts/g, please specify voltage range when ordering.

How to Order

Model #	Part #
QFM-180-20G-SQ	848213-000
QFM-180-20G-RD	848540-000

Accelerometers exported from the United States must be done in accordance with the Export Administration Regulations (EAR) and/or the International Traffic in Arms Regulations (ITAR) as applicable.

Jewell Instruments LLC, 850 Perimeter Road, Manchester, NH 03103
sales@jewellinstruments.com • www.jewellinstruments.com • Tel (800) 227-5955